THE PROPERTY OF THIS DRAWING IS ESTABLISHED BY LAW
IT IS FORBIDDEN TO REPRODUCE IT OR SHOW IT TO THIRD PARTY
WITHOUT A WRITTEN AGREEMENT.

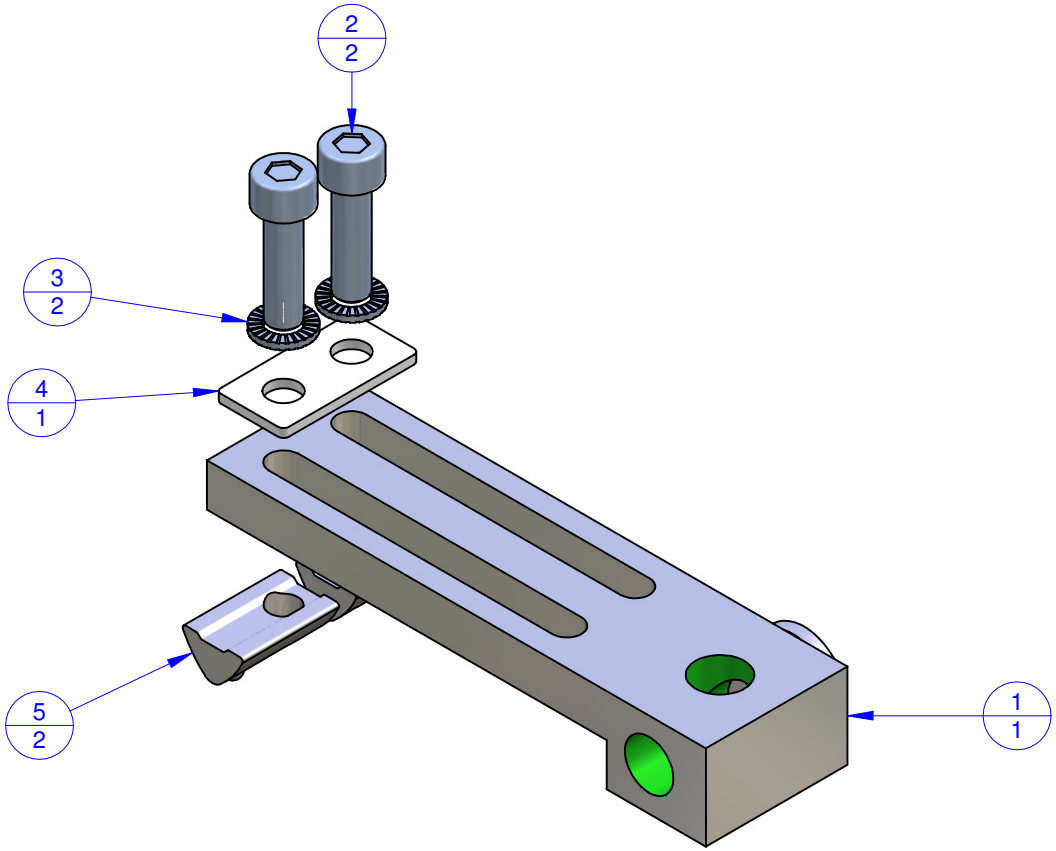

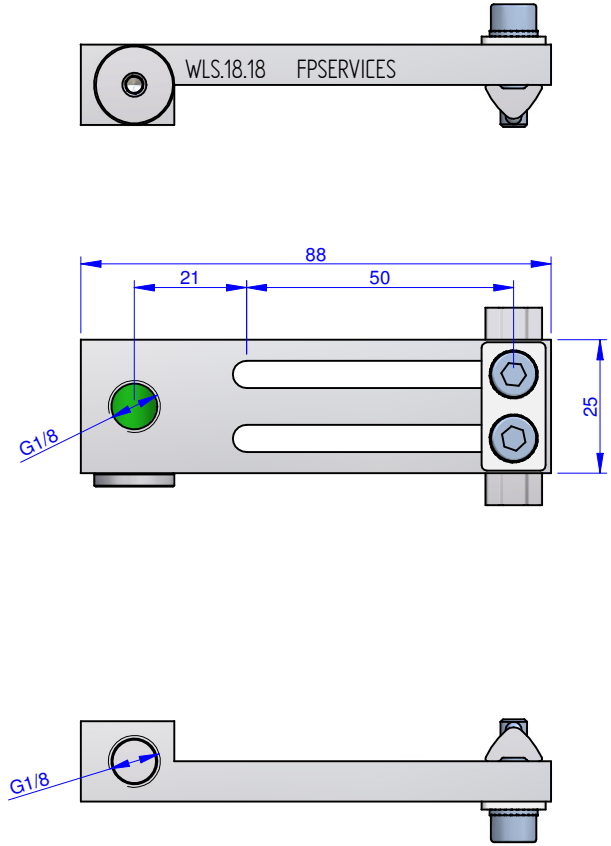

Obgect Number	Name	QTY
1	CA.WLS.18.18	1
2	V.TCEI M5X18	2
3	R.5.SCH	2
4	R.05.12	1
5	CA.02.05.005	2

MODIFICATIONS: VARIED DIMENSIONS AS OF DATE:
7 8 9 10 11 12

MODIFICATIONS: VARIED DIMENSIONS AS OF DATE:
1 2 3 4 5 6

Format A3
UNI 936-76

FP Services

GENERAL TOLERANCE:
UNI - ISO 2768
CLASSE f

DESCRIPTION

DESIGNED FROM
FPSERVICES

DATE 12/2014

WEIGHT 0,065 kg
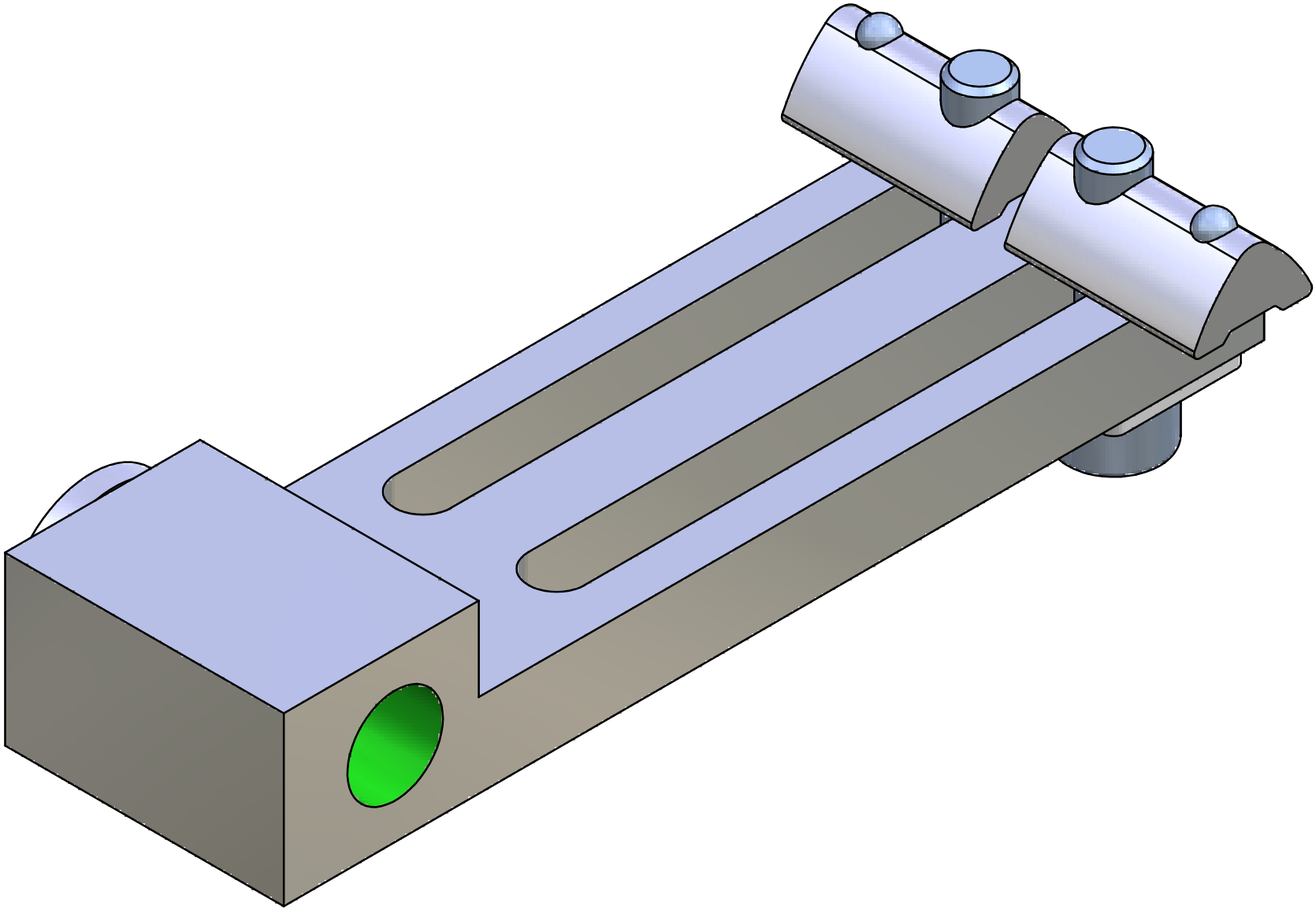
CODE **CA.WLS.18.18.6**